ZR BL

DIAPHRAGM PUMP FOR AIR/GAS APPLICATION



Attributes	Applications
100% Oil-free	Aspiration (surgical, welding)
Excellent gas sealing / Contamination free	Small portable equipment
Optimal flow to size ratio	Environmental sampling
Low power consumption and noise level	Laboratory analysis
Quick and easy maintenance procedure	Laser cutters
Exceptional motor lifetime	Pick and place, transport
	Vacuum-therapy

Performance Data

Maximum Flow	6,5 l/min
Maximum Vacuum	-867 mbar
Maximum Pressure	1000 mbar
Maximum vacuum Start up	-200 mbar
Maximum pressure Start up	200 mbar

Motor Data

Motor Type	DC Brushless	
Voltage	12 Vdc	24 Vdc
Maximum current	1.00 A	0.60 A
IP	30	
Insulation Class	F	
Electrical Connection	2 wire length 220 mm	

Additional Data

Average Noise	55 dB
Weight	470 g

Dimensions in mm

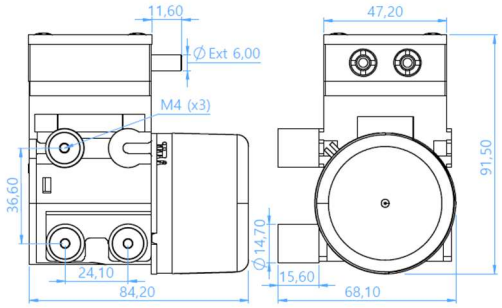

Available Material Options

Head	PPS
Diaphragm	FKM (alternatives on request)
Valve	FKM (alternatives on request)
O-Ring	EPDM (alternatives on request)

Service kits

RUBBER KIT ZR Z5	900.30

Vacuum / Flow characteristic

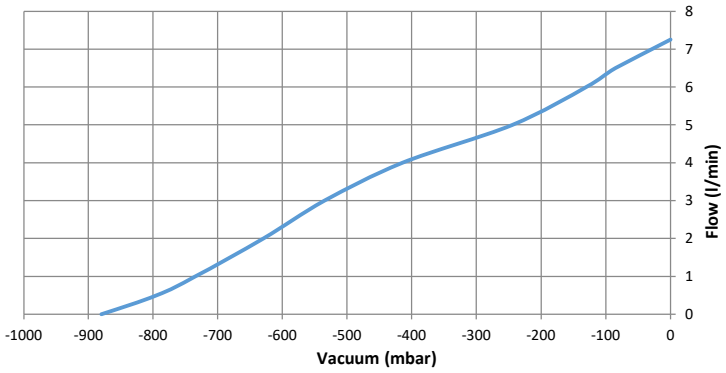

Pressure / Flow characteristic

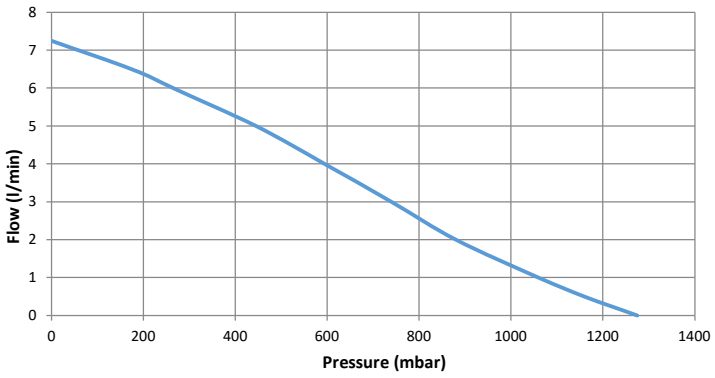

www.electroad.es

HEADQUARTERS
Castellví de Rosanes factories 1 & 2
La Pedrosa Industrial Park
08783 Masquefa; Barcelona; Spain
Tel: +34 937 728 529
Fax: +35 937 728 591
Email: comercial@electroad.es

ITALY SALES OFFICE
Via Giacomo Manzù 25
24122 Bergamo; Italy
Tel: +39 389 445 8471
Tel: +39 320 225 0058
Email: fdonado@ead-pumps.com
Email: sdeleonardis@ead-pumps.com

Your **success** is our satisfaction

Solutions for a **smart world**

Electro A.D., S.L. as a manufacturer does not guarantee or assume any obligation related to the data contained on this document and remarks that it could slightly differ between different products.
Electro A.D., S.L. keeps the right to modify any part or group of parts manufactured without notice in order to improve the product.
ZR BL Gas Datasheet rev.0 – All rights reserved.